PARTS LIST			
ITEM	QTY	PART NUMBER	DESCRIPTION
1	1	0907-202-1	M/STEEL PADDLE LOCK BODY ASSEMBLY - P/C BLACK
2	1	0907-202-2	M/STEEL TONGUE COVER PLATE - P/C BLACK
3	1	0907-202-3	M/STEEL TONGUE - Z/C PASSIVATE

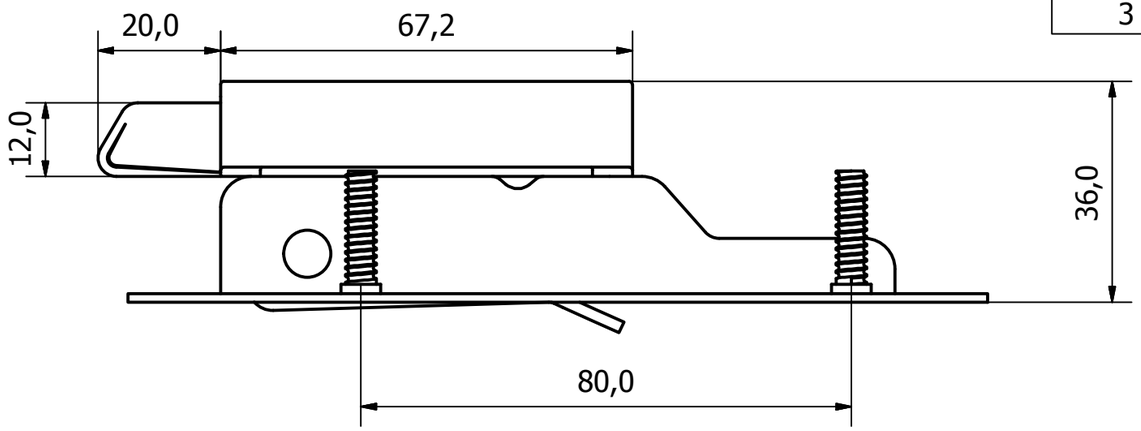

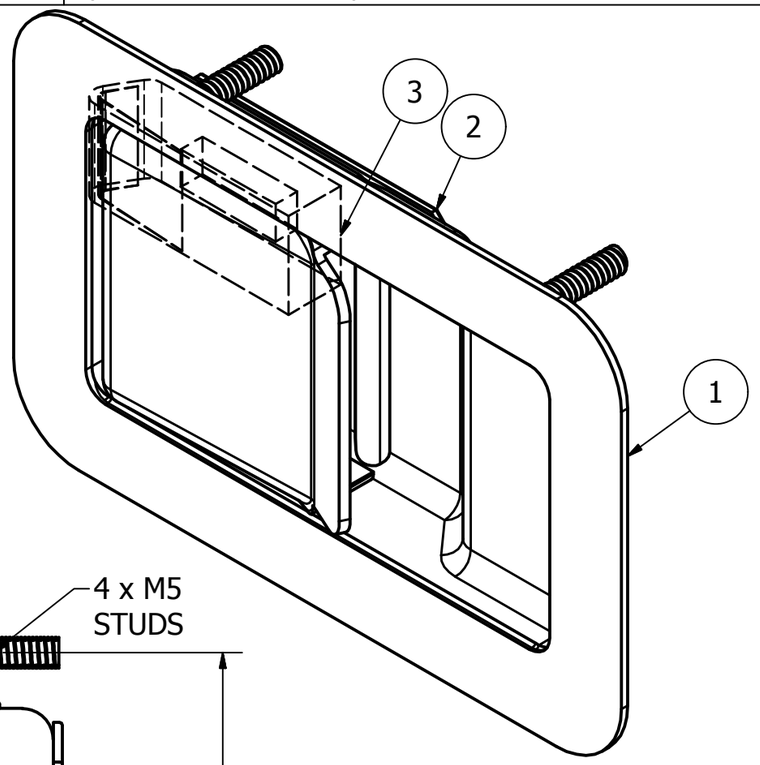

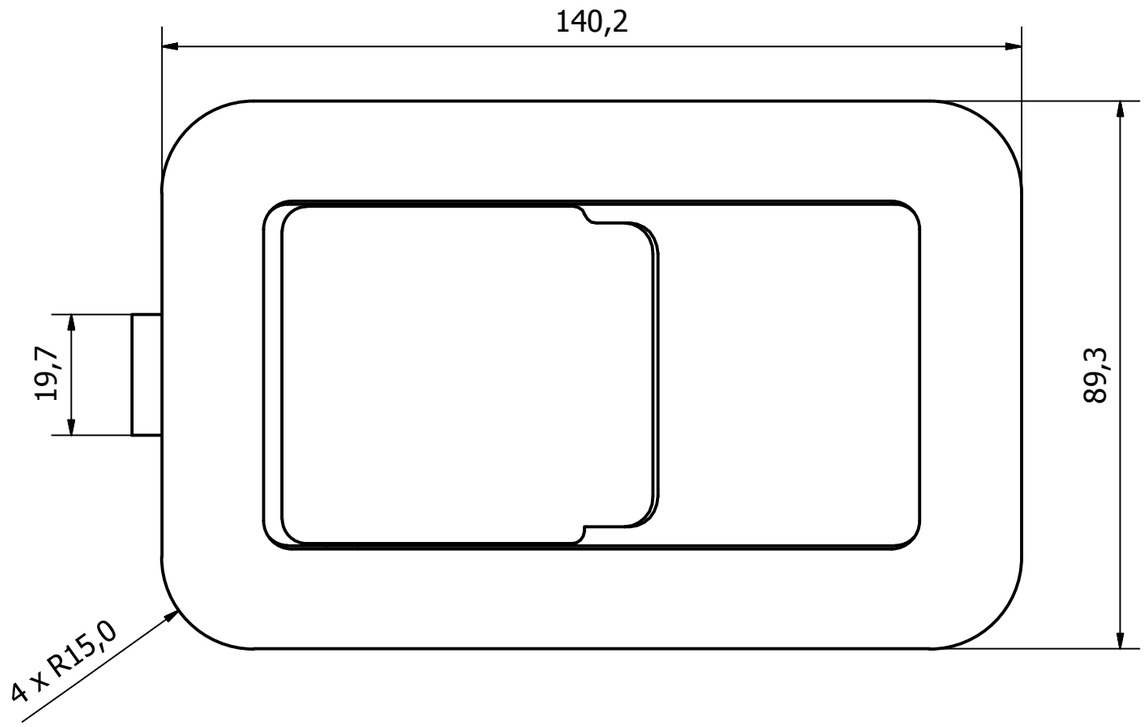

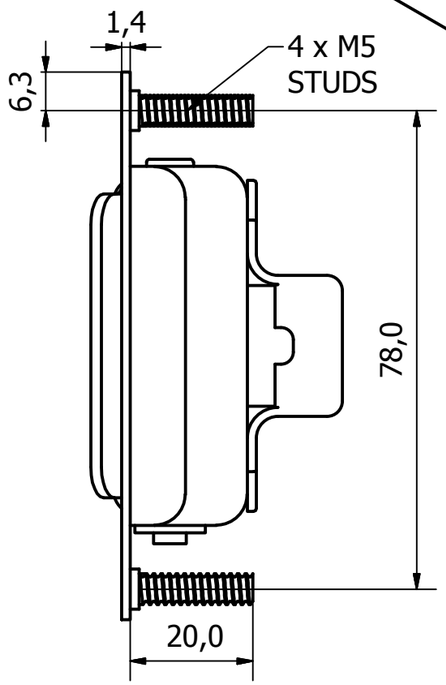

REV	DESCRIPTION	DATE	APPROVED
1	VALIDATION COMPLETE	16/11/17	A.P

GENERAL TOLERANCES ON LENGTHS

0.5 - 6 ± 0.1mm
6 - 30 ± 0.2mm
30 - 120 ± 0.3mm
120 - 400 ± 0.5mm
400 - 1000 ± 0.8mm
1000 - 2000 ± 1.2mm
2000 - 4000 ± 2.0mm

ALBERT JAGGER LTD
GREEN LANE
WALSALL
WEST MIDLANDS
WS2 8HG
PHONE: 01922 471000
FAX: 01922 648021

THIS DRAWING & THE DESIGN SHOWN ARE THE PROPERTY OF ALBERT JAGGER LTD AND MUST NOT BE USED OR COPIED BY A THIRD PARTY WITHOUT PERMISSION

DRAWN BY	CHECKED BY		SCALE	MATERIAL	MASS	FINISH	Date		
U.F	A.P	THIRD ANGLE PROJECTION	1 : 1	SEE TABLE	0.452 kg	SEE TABLE	16/11/2017	ALL DIMS IN MM UNLESS STATED DO NOT SCALE	A3

albert Jagger

BLACK PADDLE LOCK - NON LOCKING NO KNOB

0907-202

Edition 1

Sheet 1 / 1