PARTS LIST			
ITEM	QTY	PART NUMBER	DESCRIPTION
1	1	2017-001-1	HINGE BASE PLATE - M/STEEL
2	1	2017-001-2	HINGE PIN 88 O/A - M/STEEL
3	1	2017-001-3	HINGE MAIN PLATE - M/STEEL

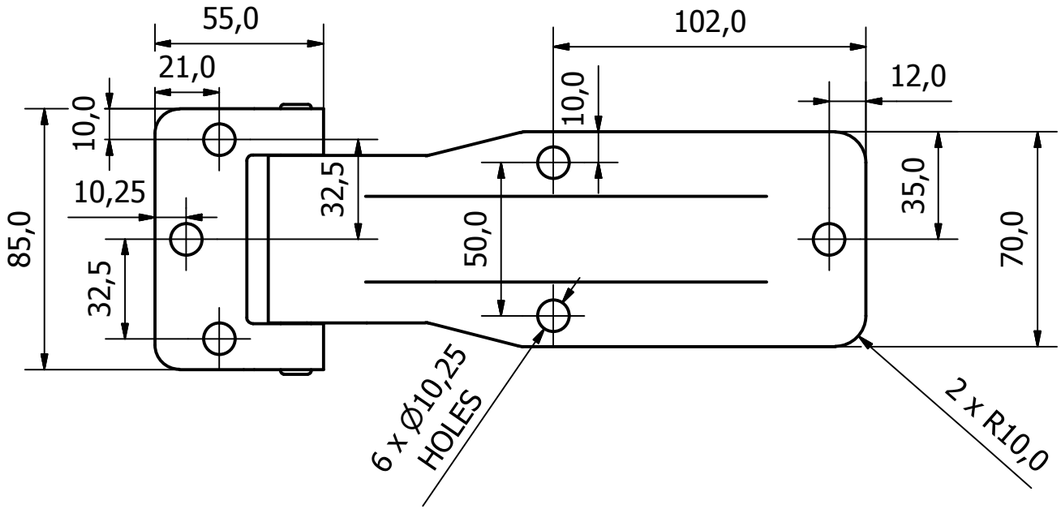

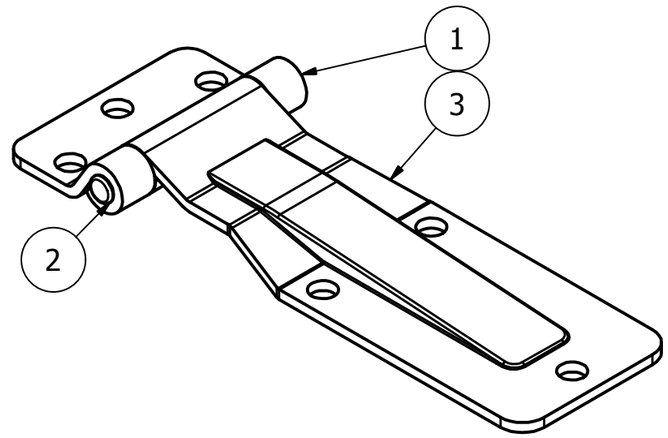

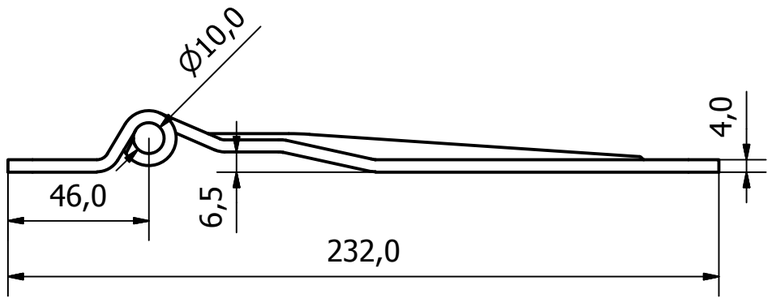

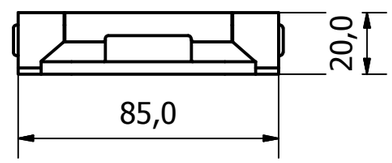

NOTE:

HINGE DESIGNED FOR 180° APPLICATIONS
BUT WILL ROTATE THROUGH 270°

REV	DESCRIPTION	DATE	APPROVED
1	VALIDATION COMPLETE	21/10/16	A.P

GENERAL TOLERANCES ON LENGTHS

0.5 - 6 ± 0.1mm
6 - 30 ± 0.2mm
30 - 120 ± 0.3mm
120 - 400 ± 0.5mm
400 - 1000 ± 0.8mm
1000 - 1200 ± 1.2mm
2000 - 4000 ± 2.0mm

ALBERT JAGGER LTD
GREEN LANE
WALSALL PHONE: 01922 471000
WEST MIDLANDS FAX: 01922 648021
WS2 8HG

THIS DRAWING & THE DESIGN SHOWN ARE THE PROPERTY OF ALBERT JAGGER LTD AND MUST NOT BE USED OR COPIED BY A THIRD PARTY WITHOUT PERMISSION

DRAWN BY	CHECKED BY		SCALE	MATERIAL	MASS	FINISH	Date		
U.F	A.P	THIRD ANGLE PROJECTION	1 : 2	-	0.707 kg	Z/C PASSIVATE	29/09/2016	ALL DIMS IN MM UNLESS STATED DO NOT SCALE	A3

albert Jagger

PRESSED STEEL DOOR HINGE - M/STEEL

2017-001	Edition 1	Sheet 1 / 1